Furniture Design_INT-517-09_FA 2017		Lucia De Respinis
Jan Wright Project Name *Coffee Table* Completion *10/30/2017* Page size *36" x 12"*	Materials *WD-1 - 1 ½" THK. Spalted Maple* *WD-2 - 1 ½" x 1 ½" Maple Lumber* *M-1 - ½" Satin Black Round Steel Rod 1 in.* *Black Steel Leg Bracket [1.5" x 0.75"]* *2 x Black steel welding plates [1" x 10"]* *1" Threaded Stem Furniture Glide [Black]*	Details *Wood leg connected to table top via a square post bracket.* *The two rounded steel rod ends are welded together seamlessly below the table top.* *Steel frame welded to two steel welding plates, screwed directly to the underside of the table*

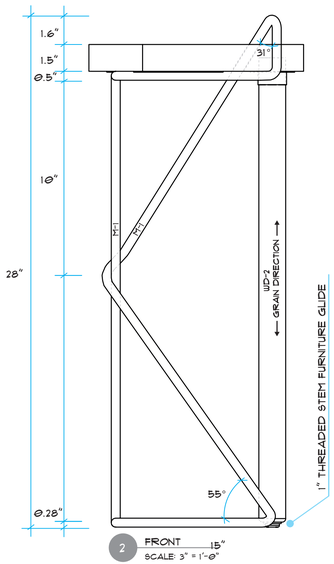

2 FRONT
SCALE: 3" = 1'-0"

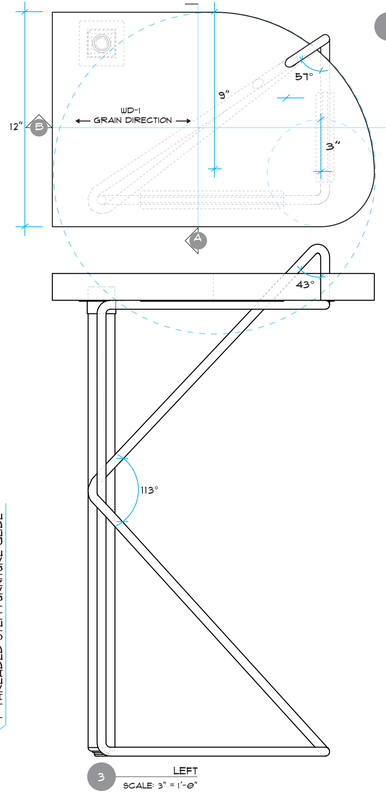

3 LEFT
SCALE: 3" = 1'-0"

1 TOP VIEW
SCALE: 3" = 1'-0"

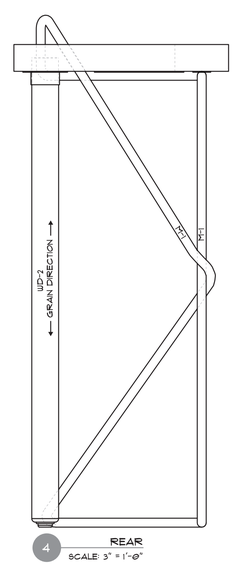

4 REAR
SCALE: 3" = 1'-0"

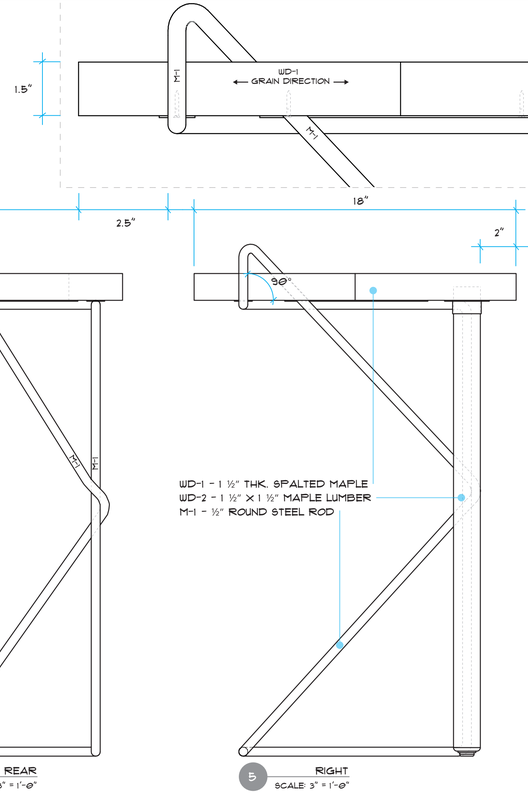

5 RIGHT
SCALE: 3" = 1'-0"

1 DETAIL
SCALE: HALF SCALE

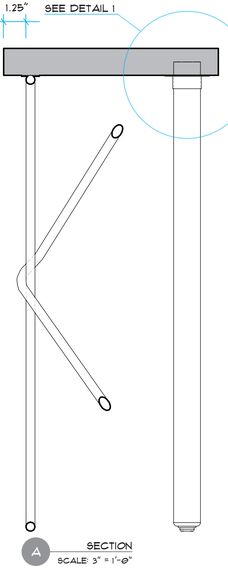

A SECTION
SCALE: 3" = 1'-0"

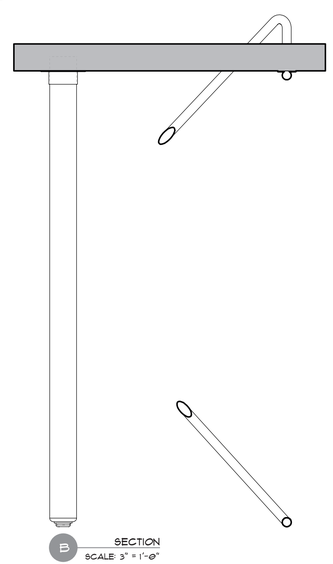

B SECTION
SCALE: 3" = 1'-0"